# Ultimate Limit State Design

# CHAPTER X

## Article 41 Static Equilibrium Limit State

It should be verified that the static equilibrium limits (overturning, sliding) are not exceeded under the worst loading conditions, by applying the methods of Rational Mechanics and taking into account the actual conditions of the supports.

$$E_{d,estab} \geq E_{d,desestab}$$

where:

$E_{d,estab}$ The stabilising action effect design value.

$E_{d,desestab}$ The destabilising action effect design value.

**COMMENTS**

As an explanatory example, in the case of a structure where the permanent load of the same origin may be stabilising in one zone and overturning in another, mutually compensating, the case is given of a deck having the structural scheme as shown in Figure 41.a, in which the action of variable loads is supposed possible.

The permanent characteristic loads $G_1$ and $G_2$ have the same origin (the actual weight of a given material) and the variable load $q$ may be extended to any length. The load hypothesis for the stability design would be:

- If the static scheme corresponds to the service situation, in accordance with that indicated in Figure 41.b.
- If the static scheme corresponds to the construction situation, in accordance with that indicated in Figure 41.c.

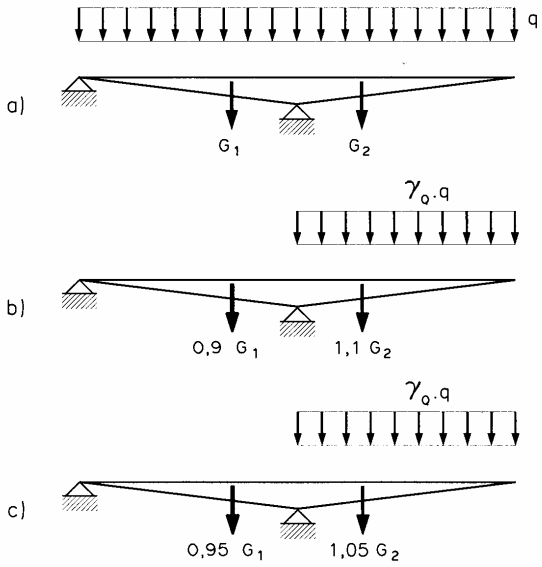


Figures 41.a, b and c

## Article 42 Limit state of failure due to normal stresses

### 42.1 General design principles

### 42.1.1 Section definition

#### 42.1.1.1 Section dimensions

To obtain the strength capacity of a section, the actual dimensions of the section in the construction or service conditions stage analysed should be employed, except in the case of T-beams, I-beams or similar members, for which the effective widths indicated in 18.2.1 should be taken into account.

#### 42.1.1.2 Resistant section

For the purpose of design at the Limit State of Failure under normal stresses, the resistant section of concrete is obtained from the dimensions of the member, in compliance with the criteria of 40.3.5.

### 42.1.2 Basic hypotheses

The design of ultimate strength capacity of sections should be carried out in accordance with the following general hypotheses:

a) Failure is characterised by the strain value in certain fibres of the section, as defined by the failure deformation envelopes detailed in 42.1.3.

b) The distribution of longitudinal strain is linear over the depth of the section. This hypothesis is valid for members in which the ratio between the distance between points of zero moment and the total depth is greater than 2.

c) The strain $\varepsilon_s$ in reinforcement remains equal to the that in the concrete surrounding it.
The total strain in bonded prestressing steel should take into account, not only the strain produced in the corresponding fibre in the plane of strain at failure ($\varepsilon_0$), but also the strain caused by the prestressing and the strain of decompression (Figure 42.1.2) as defined below.

$$\Delta \varepsilon_p = \varepsilon_{cp} + \varepsilon_{p0}$$

where:

$\varepsilon_{cp}$ Decompression strain in the concrete at the level of the steel fibre under consideration.

$\varepsilon_{p0}$ Pre-deformation in the prestressing steel due to prestressing action during the stage under consideration, taking into account any losses that might have occurred.

d) The design stress-strain diagram for concrete is one of those defined in 39.5. The concrete tensile strength is not taken into account
The design stress-strain diagram for reinforcing steel is defined in 38.4.
The design stress-strain diagram for prestressing steel is defined in 38.7.

e) The general equations of balanced forces and moments should be applied to the stresses in the section. In this way, the ultimate strength capacity may be calculated by integrating the stresses in reinforcing and prestressing steels.

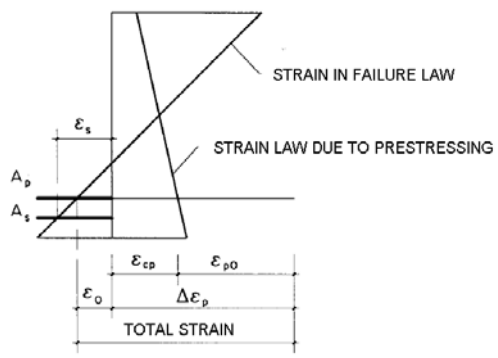


Figure 42.1.2

**COMMENTS**

The basic hypotheses as given are valid for sections subjected to normal stresses in failure, due to concrete failure or excessive plastic strain in the reinforcements.

Normal strains are those that originate normal strain in straight sections. They consist of bending moments and normal forces.

## 42.1.3 Strain envelopes

The limit strains in sections, in accordance with the nature of the stresses, imply that the following domains may be recognised.

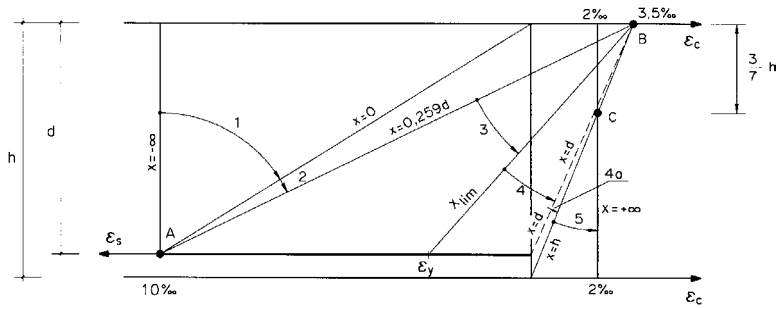


Figure 42.1.3

Domain 1: Pure or compound tension, where the entire section is under tension. The strain lines turn about point A, corresponding to an elongation of the steel under greatest tension of 10 per 1000.

Domain 2: Pure or compound bending, where the concrete does not reach the ultimate bending strain. The strain lines turn about point A.

Domain 3: Pure or compound bending, where the strain lines turn about point B, corresponding to the ultimate bending strain of concrete $\varepsilon_{cu}$ = 3.5 per 1000. The elongation of the reinforcement under the greatest tension is between 10 per 1000 and $\varepsilon_y$, where $\varepsilon_y$ is the elongation corresponding to the yield stress of the steel.

Domain 4: Pure or compound bending, in which the strain lines turn about point B. The elongation of the reinforcement under greatest tension lies between $\varepsilon_y$ and 0.

Domain 4a: Compound bending where all the reinforcement is compressed and where there is a small zone of concrete in tension. The strain lines turn about point B.

Domain: Pure or compound compression, in which both materials are under compression. The strain lines turn about point C, as defined by the line corresponding to the ultimate compression strain of concrete $\varepsilon_{cu}$ = 2 per 1000 .

**COMMENTS**

Effective depth "d" is the distance between the centroid of the tensioned or less compressed reinforcement and the more compressed zone of the section. In order to obtain the reinforcement centroid it must be considered the nominal covering defined in 37.2.4.

The strain domains correspond to all normal stresses in a continuous manner, from simple tension to simple compression on varying the depth of the neutral axis x, from -∞ to +∞.

A section's neutral axis is the line of zero strain. Its distance to the most compressed fibre is designated *x*.

Steel elongation is limited to 1%, from the zero strain plane, by considering that failure is reached due to excessive plastic strain.

Maximum concrete strain is fixed at 0.35% in bending and at 0.2% in simple compression.

Domain 1: The neutral axis depth varies from $x = -\infty$ ($\varepsilon_s = \varepsilon_c = 10$ per 1.000) to $x = 0$ ($\varepsilon_s = 10$ per 1,000, $\varepsilon_c = 0$).

Domain 2: The neutral axis depth varies from $x = 0$ to $x = 0{,}259\ d$, which corresponds to the critical point at which both material reach maximum strain: $\varepsilon_s = 10$ per 1,000 and $\varepsilon_c = 3.5$ per 1,000.

Domain 3: The neutral axis depth varies from $x$=0,259 $d$ to $x = x_{lim}$, the limiting depth at which the most tensioned reinforcement $\varepsilon_y$ corresponding to its yield stress.

Domain 4: The neutral axis depth varies from $x = x_{lim}$ to $x = d$, at which the most tensioned reinforcement has a strain of $\varepsilon_s = 0$.

Domain 4a: The neutral axis depth varies from $x = d$ to $x = h$, at which all the concrete begins to be compressed.

Domain 5: The neutral axis depth varies from $x = h$ to $x = +\infty$, in other words, to simple compression.

### 42.1.4 Section analysis

The section equilibrium equations may be derived from the basic hypotheses as defined in 42.1.2, producing a system of non-linear equations.

In the case of designing reinforcement, the shape and dimensions of the concrete section, the position of the reinforcement, the material properties and the design stresses are known, while the plane of strain at failure and the amount of reinforcement are unknown.

In the case of verification, the shape and dimensions of the concrete section, the position and amount of the reinforcement, and the material properties are known, while the plane of strain at failure and the sectional stresses are unknown.

**COMMENTS**

With current software technology, it is possible to tackle dimensioning and section verification under maximum general terms.

For the simplest, most frequent cases, Appendix 8 proposes simplified formulae for the calculation of rectangular and “T” shaped reinforced concrete subjected to simple bending and rectangular subjected to compound and biaxial bending.

## 42.2 Special cases

### 42.2.1 Minimum eccentricity

In supports and elements having a similar function, each section subjected to a normal external compressive action $N_d$ should be able to withstand this compression with a minimum eccentricity, due to uncertainty about the position of the point of application of the normal stress, equal to the greater of the two values.

$$h/20 \text{ and } 2 \text{ cm}$$

This eccentricity shall be measured from the centroid of the gross section in the least favourable of the main directions, and in one direction only.

### 42.2.2 The effect of confined concrete

Confinement of concrete under compression improves its conditions of strength and ductility, the latter aspect being of great significance in ensuring a structural behaviour that permits optimum use of all the additional strength capacity of a statically indeterminate element.

Confinement of the compressed zone of concrete can be achieved with a suitable amount of transverse reinforcement that is appropriately arranged and anchored.

**COMMENTS**

In order to quantify the confinement containment produced by the reinforcement, the specialised literature should be consulted, or the principles explained in 40.3.4. should be followed.

### 42.2.3 Prestressing steel without bond

The stress increment of non-bonded prestressing steel depends on the increase of tendon length between anchorages, what depends on global deformation of the structure at ULS.

**COMMENTS**

Ignoring the increase in stress in a non-bonded prestressing steel in the analysis of the strength capacity of a section at Ultimate Limit State due to normal stresses, constitutes a hypothesis on the side of safety. In this case, the effect of prestressing should be included in the design forces, which should take into account the structural effect of the prestressing with the design values defined in Article 13.

When the aim is to take the stress increase in non-bonded prestressing steel into account, the simplified criteria that establish various recommendations dedicated to non-bonded prestressing or exterior prestressing may be employed.

## 42.3 Reinforcement arrangement

### 42.3.1 General

In order for any reinforcing steel under compression to be taken into account during design, it must be fastened by stirrups placed at separations of $s_t$ equal to or less than fifteen times the diameter $Ø_{min}$ of the thinnest compressed bar, with the stirrups having a diameter $Ø_t$ equal to or greater than one quarter of $Ø_{max}$, where $Ø_{max}$ is the diameter of the thickest compressed bar. If the separation $s_t$ between stirrups is less than 15 $Ø_{min}$, their diameter $Ø_t$ may be reduced so that the relationship between the cross-section of the stirrup and the interval $s_t$ remains the same as when the following dimensions are adopted:

$$\varnothing_t = 1/4\ \varnothing_{máx}\ ;\ \text{and}\ s_t = 15\ \varnothing_{mín}$$

For compressed members, $s_t$ should, in all cases, be smaller than the smallest dimension of the element and not greater than 30 cm.

Longitudinal reinforcing steel, or skin reinforcement, should be suitably distributed in order to prevent non-reinforced zones of concrete from occurring, in such a way that the distance between two consecutive longitudinal bars (*s*) meets the following limitations

| | | |
|---|---|---|
| *s* | ≤ | 30 cm. |
| *s* | ≤ | three times the gross thickness of the part of the element section, web or flanges, in which they are located. |

In zones where the bars overlap or bend it might be necessary to increase the transverse reinforcement.

**COMMENTS**

In order for the stirrups to provide efficient bracing for the longitudinal reinforcement, it~~s~~ is essential that they actually fasten the longitudinal bars in compression, preventing their buckling. For example, if the ~~a~~ longitudinal reinforcement of a column is arranged not only at the corners, but also along the lengths of the sides so that the central bars are effectively supported, it would be convenient to adopt the arrangements of the type shown in figures 42.3.1.a, 42.3.1.b and 42.3.1.c, supporting at least one of every two consecutive bars on the same side and all those that are arranged at a distance of >15 cm.

In walls or shear walls subjected to dominant compression, it is advisable to provide stirrups to support each of the bars, alternating them both horizontally and vertically.

It is also advisable to arrange sufficient cross-sectional reinforcement tying all nodes.

Figures 42.3.1.a, b and c

Leyenda: ALTERNATIVE STIRRUP GROUPS

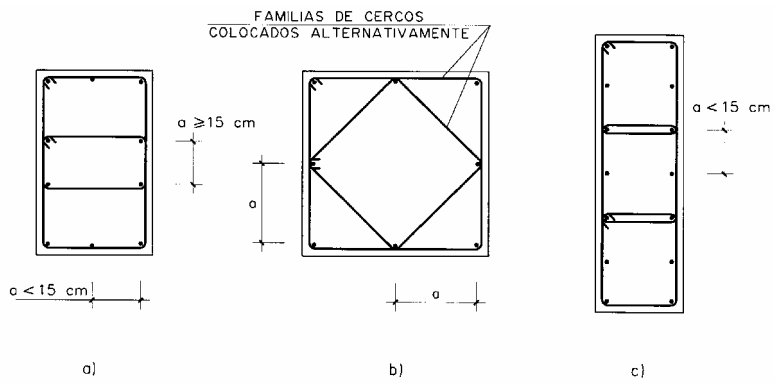


## 42.3.2 Pure or combined bending

In all those cases where failure of a section is produced by pure or combined bending, the longitudinal tensile reinforcement should meet the following limitation.

$$A_p f_{pd} + A_s f_{yd} \geq 0,25 \frac{W_1}{h} f_{cd}$$

where:

$A_p$ The bonded prestressing steel area.
$A_s$ The reinforcing steel area.
$f_{pd}$ Design value of the tensile strength of prestressing steel.
$f_{yd}$ Design yield stress of reinforcing steel.
$f_{cd}$ Design value of concrete cylinder compressive strength.
$W_1$ Section modulus of the gross section relating to the fibre under greatest tension.
$h$ Overall depth of the cross-section.

**COMMENTS**

The limitation imposed on the tension reinforcement is justified by the need of preventing brittle failure, without any prior warning, when the concrete reaches its tensile strength, as a result of the reinforcement being insufficient to guarantee the transmission of forces when the concrete cracks. It is therefore necessary to arrange sufficient reinforcement to withstand a tensile force equal to that of the block under tension of the section before the cracking is produced.

The formula in the article does not take into account the influence of the axial effect by which therefore, constitutes an approximation on the side of safety.

For prestressed concrete sections, the formula given in the article constitutes a simplification. For the purpose of this formula, the evaluation of $f_{pd}$ shall be reduced in the stress corresponding to the predeformation of the prestressing steel.

The amount of minimum reinforcement may also be computed, in a more precise way, with the following expression:

$$A_p f_{pd} \frac{d_p}{d_s} + A_s f_{yd} \geq 0.25 f_{cd} \frac{W_1}{h} + 1.25 \frac{P_k}{h} \left( \frac{W_1}{A_c} + e \right)$$

where:

$d_p$ effective depth referring to tendons;
$d_s$ effective depth referring to reinforcing steel;
$A_c$ area of plain concrete section;
$P_k$ prestressing force;
$e$ eccentricity of prestressing force referring to centroid of plain concrete section;
$f_{pd}$ design stress of bonded prestressing steel, including the predeformation.

For reinforced concrete sections a reduction of the minimum reinforcement defined in the article is admitted using the $\alpha$ factor indicated below:

$$\alpha = 1,5 - 1,95 \frac{A_s h f_{yd}}{f_{cd} W_1}$$

For rectangular sections of reinforced concrete, the previous criteria lead to the following expressions:

$$A_s \geq 0,04 A_c \frac{f_{cd}}{f_{yd}}$$

where $A_c$ is the total cross section of the concrete and

$$\alpha = 1,5 - 12,5 \frac{A_s f_{yd}}{A_c f_{cd}}$$

In cases of bending combined with axial effect, it is recommended that a minimum compression reinforcement is available which meets the conditions:

$$A'_s f_{yd} \geq 0,05 N_d$$

where $A'_s$ is the area of reinforcing steel under compression.

### 42.3.3 Pure or combined compression

In those sections that are subjected to pure or compound compression, the main bars under compression $A'_{s1}$ and $A'_{s2}$ (see figure 42.3.3) should comply with the following limitations

$$A'_{s1}\, f_{yc,d} \geq 0.05\, N_d \qquad A'_{s1}\, f_{yc,d} \leq 0.5\, f_{cd}\, A_c$$
$$A'_{s2}\, f_{yc,d} \geq 0.05\, N_d \qquad A'_{s2}\, f_{yc,d} \leq 0.5\, f_{cd}\, A_c$$

where:

$f_{yc,d}$ Design strength of the reinforcement under compression $f_{yc,d} = f_{yd} \not> 400\ N/mm^2$.
$N_d$ Design value of the axial force.
$f_{cd}$ Design value of concrete cylinder compressive strength.
$A_c$ The effective concrete cross section area.

Figure 42.3.3

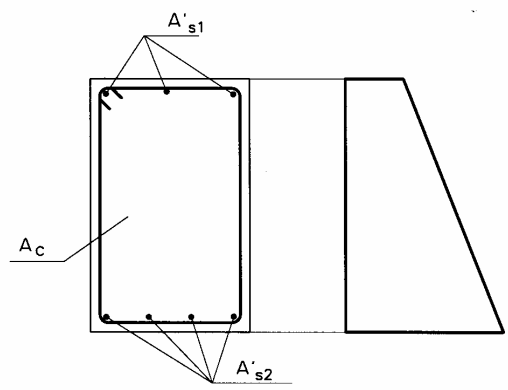


**COMMENTS**

In cases of pure compression with symmetric reinforcement, the four limiting formulae included in the mentioned section are reduced to:

$$A'_s\, f_{yc,d} \geq 0.1\, N_d$$
$$A'_s\, f_{yc,d} \leq f_{cd}\, A_c$$

where $A'_s$ is the area of reinforcement within the compression zone.

### 42.3.4 Pure or combined tension

In the case of concrete sections under pure or combined tension, the following limitations should be satisfied:

$$A_p\ f_{pd} + A_s\ f_{yd} \geq 0.20\, A_c\, f_{cd}$$

**COMMENTS**

For reinforced sections in pure tension, the formula in the article not considering the bending effect is conservative. For presstressed sections in tension, the article formula is a simplification. In the referred equation, for obtaining $f_{pd}$ the tension corresponding to the prestrain of the presstressed steel must be subtracted. This condition can be also obtained with the equation:

$$A_p f_{pd} + A_s f_{yd} \geq 0.20 f_{cd} A_c + P_k$$

where $f_{pd}$ is the design strength of the adherent presstressing steel in tension, including the tension corresponding to the pre-strain.

The formula in the article does not take into account the moment of influence during the evaluation of the tensile strength results in the section prior to cracking, and which therefore, constitutes an approximation on the side of safety.

## 42.3.5 Minimum amount of reinforcement

Table 42.3.5 provides the minimum amount of reinforcement required in all cases for the various types of structural elements, in accordance with the steel employed, whenever these values are greater than those given in 42.3.2, 42.3.3 and 42.3.4.

Table 42.3.5: Minimum amount of reinforcement, per mil, referring to the total concrete section

| Structural element type | | Type of steel | |
|---|---|---|---|
| | | B 400 S | B 500 S |
| Columns | | 4.0 | 4.0 |
| Slabs (*) | | 2.0 | 1.8 |
| Beams (**) | | 3.3 | 2.8 |
| Walls (***) | Horizontal reinforcement | 4.0 | 3.2 |
| | Vertical reinforcement | 1.2 | 0.9 |

(*) Minimum amount of each reinforcement, longitudinal and cross-sectional distributed along both sides. Ground supported slabs require special study.

(**) Minimum amount of reinforcement corresponding to the side under tension. It is recommended to have a minimum reinforcement on the opposite side equal to 30% of that assigned.

(***) The minimum vertical amount of reinforcement is that corresponding to the side under tension. It is recommended to have a minimum reinforcement on the opposite side equal to 30% of that assigned. The minimum horizontal reinforcement should be distributed along both sides. Walls that are visible on both sides should have 50% on each side. For those walls that are only visible on one side, up to two thirds of the total reinforcement should be arranged on the visible side. In those cases where there are vertical contraction joints at intervals not exceeding 7.5 m, with the horizontal reinforcement interrupted, the minimum horizontal amount of reinforcement may be reduced by half.

**COMMENTS**

The minimum amount of reinforcement defined in Table 42.3.5 in the case of slabs must be distributed in both sides of the element, in such a form that the sum shall be greater than the minimum prescribed values.

The minimum amount of reinforcement for member under tension, partially or totally (due to pure bending, combined with axial effect, pure or combined tension) are given to control cracking induced by imposed deformations due to temperature and shrinkage.

In the case of members submitted to external loads or when shrinkage and temperature effects are already been considered while designing reinforcement, the amounts of reinforcement after 42.1 or 42.3.2 and 42.3.4, eventually, are sufficient for the shake of cracking control.

In the case of members subjected only to imposed deformations, when the structural stability is ensured in a different way (transverse direction in structurally one-way slabs, horizontal direction of walls, etc.), and such effects are not specifically computed, the minimum amounts of reinforcement given in the article shall be adopted.

In columns, members mainly submitted to compression, the reason for such minimum amount of reinforcement is basically constructive.

# Article 43 Instability Limit State

## 43.1 General

### 43.1.1 Scope

This article deals with the verification of isolated columns and framed structures in general where second-order effects cannot be ignored.

The application of this article is limited to those cases where the effects of torsion can be ignored

This Instruction does not cover those cases where the mechanical slenderness $\lambda$ of the columns (see definition in 43.1.2) is greater than 200.

**COMMENTS**

The deformation value, and hence the second-order stresses (figure 43.1.1.a) depends on the member's deformation properties. If the second-order effects may be ignored, then it is not necessary to check the buckling (case 1 in figure 43.1.1.b). In members subjected to compression, it may be considered that the second-order effects can be ignored when the strength capacity loss, with respect to the cross section, is less than 10%.

Otherwise, these effects could cause:

- a stable deformation $\Delta_T$ which, when added to the first-order eccentricity, would cause the failure of the critical section (case 2 of figure 43.1.1.b).
- failure due to buckling, since for the analysed load situation, the support reaches an unstable equilibrium state (case 3 in figure 43.1.1.b).

Figures 43.1.1.a and b

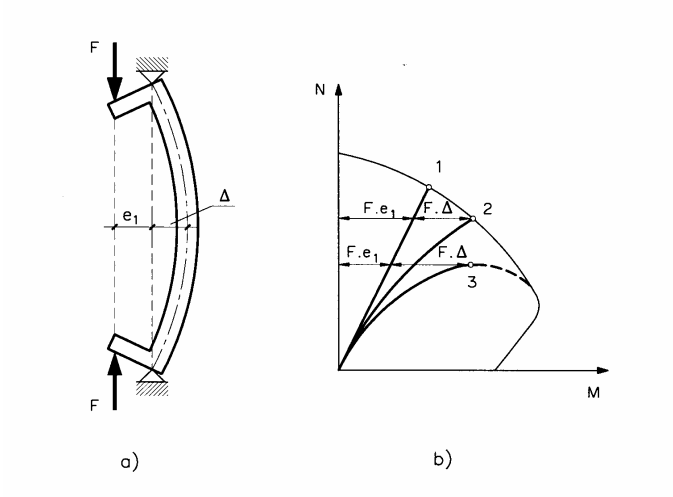


## 43.1.2 Definitions

For the purpose of the application of this Article:

- *Non-sway structures* are those where the nodes, under design actions, display transverse displacements, the effects of which may be ignored from the point of view of the stability of the entire structure.
- *Sway structures* are those where the nodes, under design actions, display transverse displacements the effects of which may not be ignored from the point of view of the stability of the entire structure.
- *Isolated supports* are statically determined supports, or supports in frames where the position of the points where the second-order moment is zero does not vary with the load size.
- *Mechanical slenderness* of a constant section support is the quotient of the effective buckling length $l_0$ of the support (distance between points of inflection of the column's deformed shape) divided by the radius of gyration *i* of the entire concrete section in the direction under consideration.
- *Geometric slenderness* of a constant section support is the quotient of the effective buckling length $l_0$ of the support divided by the dimension (*b* or *h*) of the section which is parallel to the plane of buckling.

**COMMENTS**

The provided definitions for non-sway and sway structures are not intended to establish a rigid classification, but rather to offer two terms of reference. The designer is responsible for deciding the method to be used for structure verification, taking into account that indicated in 43.3 and 43.4.

The verification in relation to isolated supports is given in 43.5.

In flat frames, the effective buckling lengths lo in the plane under consideration, are a function of the relative stiffness of the beams and supports that meet at the extreme nodes of the considered element under compression and may be determined as $l_o = \alpha \cdot l$, where $\alpha$ may be obtained from the nomograms of figure 43.1.2 and $l$ is the actual length of the element under consideration.

Figure 43.1.2

NON-SWAY FRAMES (intraslacionales)

SWAY FRAMES

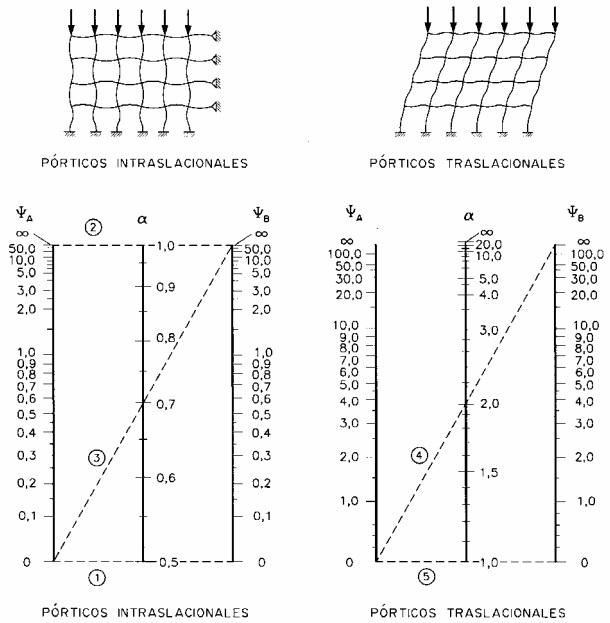


The following formulae may be employed in place of the previous nomograms:

- for non-sway frames

$$\alpha = \frac{0,64 + 1,4\,(\psi_A + \psi_B) + 3\,\psi_A \_ \psi_B}{1,28 + 2\,(\psi_A + \psi_B) + 3\,\psi_A \_ \psi_B}$$

- for sway frames

$$\alpha = \sqrt{\frac{7,5 + 4\,(\psi_A + \psi_B) + 1,6\,\psi_A \_ \psi_B}{7,5 + (\psi_A + \psi_B)}}$$

$\Psi$ Stiffness ratio $\sum \frac{E\,I}{L}$ of the supports to $\sum \frac{E\,I}{L}$ of the beams, at each end A and B of the support under consideration. The gross inertia of the section is taken as the value for $I$ .

$\alpha$ The effective buckling length factor which, for the indicated cases, adopts the following values:

| | | |
|---|---|---|
| 1 | Double-fixed-end support | ($l_o$ = 0.5 $l$) |
| 2 | Double-pinned support | ($l_o$ = $l$) |
| 3 | Propped-cantilever support | ($l_o$ =0.7 $l$) |
| 4 | Cantilever support | ($l_o$ = 2 $l$) |
| 5 | Double-fixed-end support with moveable ends. | ($l_o$ = $l$) |

## 43.2 General Method

The general verification of a structure, taking into account geometric and mechanical non-linearity, may be carried out in accordance with the general principles indicated in 21.3.4 and 21.3.5. This verification justifies the fact that for the various combinations of possible actions, the structure does not display any instability conditions, either globally or locally at the level of its constituent elements, and that the strength capacity of the various sections of these elements is not exceeded.

The design should take into account any uncertainties associated with the prediction of second-order effects, and especially dimensioning errors and uncertainties with regards to the position and line of action of the axial loads.

**COMMENTS**

In this type of analysis, the time-dependent effects are taken into account when they are significant, whether due to the permanent load magnitude, or the existence of forces that increment the second order effects.

## 43.3 Non-sway structure verification

In non-sway structures, internal forces may be derived in accordance with first-order theory. From the internal forces values obtained in this way, the second-order effects may then be verified for each support considered in isolation, in accordance with 43.5.

**COMMENTS**

Those frame structures fitted with walls or wind-bracing cores, arranged in such a manner as to guarantee the torsional rigidity of the structure that comply with the following condition may be considered as clearly non-sway:

$$h\sqrt{\frac{N}{\sum EI}} \leq 0,6 \quad si\ n \geq 4$$

$$h\sqrt{\frac{N}{\sum EI}} \leq 0,2 + 0,1\,n \quad si\ n < 4$$

where:

*n* The number of storeys to the structure.
*h* Total structure height, from the upper side of the foundations.
*N* The sum of the reactions in the foundations, with the structure completely loaded in a service state.
$\Sigma EI$ The sum of flexion rigidity of the counter-wind elements in the direction under consideration, taking the gross cross section for the calculation of *I*.

## 43.4 Sway structure verification

Sway structures should be subject to stability verification in accordance with the general bases given in 43.2

**COMMENTS**

For the usual building structures of less than 15 storeys, where the maximum head displacement under characteristic horizontal loads, calculated by means of the first-order theory and with the rigidity corresponding to the gross cross sections, does not exceed 1/750 of the total height, it is sufficient to check

each support in isolation with the effective buckling length defined in the comments to 43.1.2 for sway structures and with the forces obtained through the application of the first order theory.

## 43.5 Verification of isolated supports

For supports with a mechanical slenderness that lies between 100 and 200, the general method laid down in 43.5.1 should be applied.

For supports with a mechanical slenderness of between 35 and 100, the approximate method given in 43.5.2 or 43.5.3 may be applied.

For supports with a mechanical slenderness of less than 35, the second-order effects may be ignored and therefore no verification at the Instability Limit State is necessary.

### 43.5.1 General Method

In general, the verification of isolated supports should be carried out in accordance with the bases given in 43.2.

**COMMENTS**

In the case of section supports and constant reinforcement subject to bending and compression, the general method may be simplified considerably if a known deformation is assured for the support (sinusoidal or parabolic, etc), just as was established for the column model method.

This type of simplification also enables the tackling of section dimensioning from other additional simplifications, just as established by the reference curve method.

If a sinusoidal deformation is adopted, then dimensioning formulae may be also deduced that enable various types of cross section and distribution of reinforcement to be taken into account, as shown below:

In order to take into account the Instability Limit State, the section should be dimensioned for a total eccentricity as given by:

$$e_{tot} = \psi\left( e_e + 0,1\, l_0^{\,2} \frac{1}{r_{tot}} \right) \geq e_2$$

where:

$e_e$ is the equivalent first order design eccentricity.

$e_e = 0,6\, e_2 + 0,4\, e_1 \geq 0,4\, e_2$ for non-sway structures,

$e_e = e_2$ for sway structures.

$e_2$ is the maximum first-order design eccentricity, taken with a positive sign.

$e_1$ is the minimum first-order design eccentricity, taken with the corresponding sign.

$1/r_{tot}$ is the total reference curvature.

$$\frac{1}{r_{tot}} = \frac{1}{r} + \frac{1}{r_f}$$

$1/r$ is the reference curve for short duration loads.

$$\frac{1}{r} = \frac{2\,\varepsilon_y}{d - d'} \frac{1 + \alpha\nu}{1 + \alpha\nu + 2\,|\nu - 0,3|}$$

$$\varepsilon_y = \frac{f_{yd}}{E_s}$$

$$\nu = \frac{N_d}{A_c\, f_{cd}}$$

$$\alpha = 4\beta \frac{e_e(d - d') + 0,1 l_0^2 \varepsilon_y}{(d - d')^2}$$

β is the reinforcement factor, given by (see table 43.5.2)

$$\beta = \frac{(d - d')^2}{4 i_s^2}$$

$i_s$ is the reinforcement radius of gyration.

$1/r_f$ is the increase in curvature due to creep.

$$\frac{1}{r_f} = \frac{8\varphi \nu_g}{(1 - 1,4 \nu_g)^2} \frac{e_e}{l_0^2}$$

$\nu_g$ is the reduced axial force of the quasi-permanent loads, with characteristic values.

$$\nu_g = \frac{N_{sg} l_0^2}{10 E_C I_C}$$

$N_{sg}$ is the characteristic axial force due to the quasi-permanent loads.

$\varphi$ Creep coefficient (see 39.8)

$I_c$ The second moment of inertia of the concrete cross section.

$E_c$ Modulus of elasticity of concrete as defined in 39.6.

$i_c$ is the turning radius for the concrete section in the direction under consideration.

Ψ is the form factor for the section.

$$\psi = 1 + 0,2 \frac{\beta 10^{-6}}{\varepsilon_y i_c \frac{1}{r}}$$

### 43.5.2 Approximate method. Axial combined bending

For supports of constant cross-section and reinforcement, the section should be dimensioned for a total eccentricity of:

$$e_{tot} = e_e + e_a \geq e_2$$

$$e_a = (1 + 0,12\beta)(\varepsilon_y + \varepsilon) \frac{h + 20 e_e}{h + 10 e_e} \frac{l_0^2}{50 i_c}$$

where:

$e_a$ Fictitious eccentricity used representing the second-order effects

$e_e$ is the equivalent first order design eccentricity.

$e_e = 0,6 e_2 + 0,4 e_1 \geq 0,4 e_2$ for non-sway supports:

$e_e = e_2$ for sway supports:

$e_2$ is the maximum first-order design eccentricity, taken with a positive sign.

$e_1$ is the minimum first-order design eccentricity, taken with the corresponding sign.

$l_0$ is the effective buckling length.

$i_c$ is the radius of gyration for the concrete section in the direction under consideration.

$h$ Total depth of the concrete section.

$\varepsilon_y$ Elongation corresponding to the yield strength of reinforcement, for design stress $f_{yd}$, that is:

$$\varepsilon_y = \frac{f_{yd}}{E_s}$$

$k$ An auxiliary parameter taking into account the creep effects:

$\varepsilon$ = 0.003 when the quasi-permanent axial force does not exceed 70% of the total force.

$\varepsilon$ = 0.004 when the quasi-permanent axial force exceeds 70% of the total force.

$\beta$ Reinforcement factor, given by:

$$\beta = \frac{(d - d')^2}{4\, i_s^2}$$

where $i_s$ is the radius of gyration of reinforcement. The values of $\beta$ and $i_s$ are taken from table 43,5.2 for the most frequent reinforcement arrangements.

Some values of $i_s^2$ and $\beta$ are taken from table 43.5.2 for the most frequent reinforcement arrangements.

Table 43.5.2

| **Reinforcement arrangement** | $i_s^2$ | β |
|---|---|---|
| figuras | $\frac{1}{4}(d - d')^2$ | 1,0 |
| | $\frac{1}{12}(d - d')^2$ | 3,0 |
| | $\frac{1}{6}(d - d')^2$ | 1,5 |

**COMMENTS**

Eccentricity $e_a$ does not have any physical meaning. It is a fictitious eccentricity that, when added to the equivalent first-order eccentricity $e_e$, provides a simple method of taking into account the second-order effects, leading to a sufficiently accurate value.

In this simplified method, the creep effects may be considered covered by the value of $e_a$. The quasi-permanent and total axial effects considered in the article are referred to characteristic values.

## 43.5.3 Approximate method. Bi-axial combined bending

For rectangular cross-section elements with constant reinforcement, a separate verification may be carried out in accordance with the two principal planes of symmetry if the eccentricity of the axial load is located within the shaded area shown in figure 43.5.3.a. This situation occurs if one of the two conditions shown in figure 43.5.3.a is met, where $e_x$ and $e_y$ are the design eccentricities in the direction of the *x* and *y* axes, respectively.

Figure 43.5.3.a

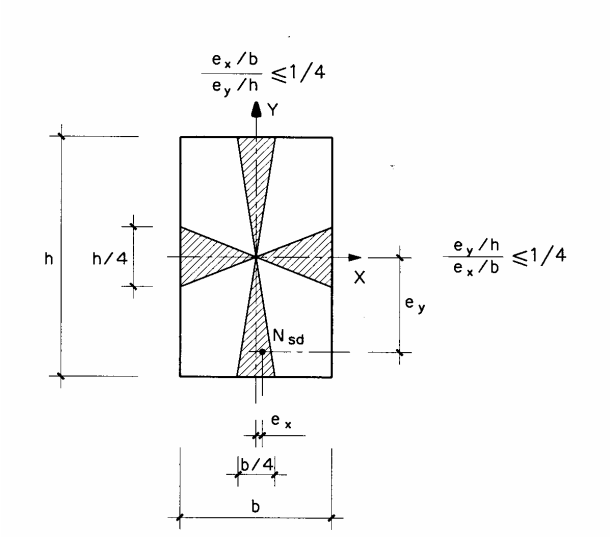


When the previous conditions are not met, the slender support may be verified if it satisfies the following condition:

$$\frac{M_{xd}}{M_{xu}} + \frac{M_{yd}}{M_{yu}} \leq 1$$

where:

$M_{xd}$ is the design bending moment in direction x, in the critical verification section, taking the second-order effects into consideration.
$M_{yd}$ is the design bending moment in direction y, in the critical verification section, taking the second-order effects into consideration.
$M_{xu}$ is the ultimate bending moment in direction x, resisted by the critical section.
$M_{yu}$ is the ultimate bending moment in direction y, resisted by the critical section.

**COMMENTS**

The formula in the article assumes, in a simplified way, a linear interaction diagram ($N_d$, $M_{xd}$, $M_{yd}$) for the critical section of the slender support, as shown in figure 43.5.3.b. If the exact diagram, obtained after the general assumptions established in Art. 42, is available, it may be used for this verification. If a program for design of sections under biaxial composed bending is available, the proposed procedure is equivalent to design the section for the internal forces $N_d$, $M_{xd}$, and $M_{yd}$ given in the article.

Figure 43.5.3.b

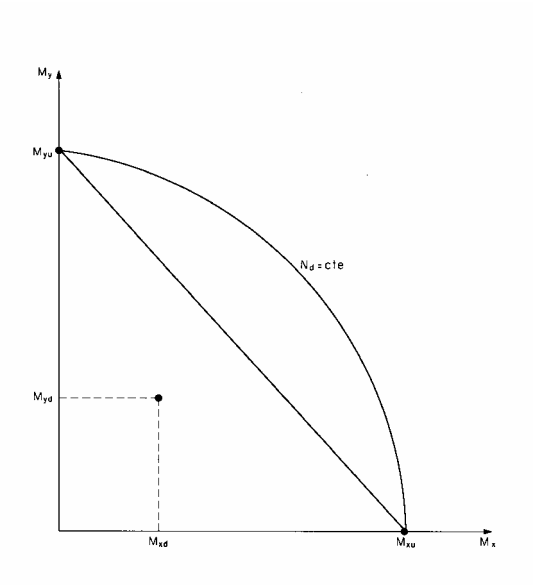


In order to determine $M_{xu}$ and $M_{yu}$ the section should be pre-dimensioned and its bearing capacity obtained in directions *x* and *y* independently. Taking into account the second-order effects, the design forces $M_{xd}$ and $M_{yd}$, may be obtained by considering the total eccentricity $e_{tot}$ defined in 43.5.2, in each direction independently.

## Article 44 Limit state of failure due to shear

### 44.1 General considerations

For the analysis of the bearing capacity of concrete structures with regards to shear stresses, the general design method that should be used is the Strut-and-Tie method (Articles 24 and 40). It should be used in all those structural elements or parts of elements that display plane states of stress, or states than can be assimilated to such, and which are subjected to shear actions in accordance with a known plane, with the exception of the special cases dealt with explicitly in this Instruction, such as linear elements, slabs and flat slabs (44.2).

### 44.2 Shear strength of linear elements, slabs and flat slabs

The specifications included in the various sub-sections below exclusively apply to linear elements subjected to combined bending, shear and axial (compressive or tensile) forces and to slabs and flat slabs essentially working in one direction.

For the purposes of this article, linear elements are those where the distance between points of zero moment is equal to, or greater than, twice their total depth, and their width is equal to, or less than, five times this depth, with their main axes being either straight or curved. Slabs or flat slabs are those flat surface elements with either solid or hollow sections that are loaded perpendicularly to their central plane.

### 44.2.1 Definition of design section

For design at the Limit State of Failure due to shear stresses, sections should be considered with their actual dimensions during the phase being analysed. Except where indicated otherwise, the resistant concrete section is obtained from the actual dimensions of the member, with the criteria of 40.3.5 being met.

**COMMENTS**

It should be taken into consideration that in provisional or definitive situations where the sheaths are not grouted, it is necessary to deduce the total holes corresponding to the prestress ducts from the actual dimensions of the member in order to obtain the resistant section of the concrete.

For members with special shapes, where the cross section is not rectangular ~~in~~, in T or in I, the designer may assimilate dummy members for some of these sections, making such assimilation in such a way that guarantees that the strength of the actual element is equal to, or greater than, the supposed dummy element. In this case, the section dimensions referred to in this section will be those of the dummy section under consideration.

### 44.2.2 Effective shear force

Verifications at the Limit State of Failure due to shear may be carried out based on the effective shear stress $V_{rd}$, given by the following expression:

$$V_{rd} = V_d + V_{pd} + V_{cd}$$

where:

$V_d$ Design value of the shear force at the ultimate limit state, as produced by external actions.

$V_{pd}$ Design value of the force component of the inclined prestressed tendons, parallel to the section under consideration.

$V_{cd}$ Design value of the force component in the tensile or compression zone, parallel to the section of the resultant normal tension, both compression and traction, on the longitudinal concrete fibres, in members with variable depth.

**COMMENTS**

If the structural effect of the prestressing is considered by employing a system of equivalent loads, then the value of $V_{pd}$ is considered in $V_d$.

If the structural model takes into account the variation of section by means of the suitable inclination of the member, then the effect of $V_{cd}$ is considered in $V_d$.

### 44.2.3 Required verifications

The Limit State of Failure due to shear ~~stress~~ will be reached when either the compressive strength of the web or its tensile strength is exhausted. It is consequently necessary to verify that both the following conditions are simultaneously satisfied:

$$V_{rd} \leq V_{u1}$$
$$V_{rd} \leq V_{u2}$$

where:

$V_{rd}$ Design value of the effective shear force at the ultimate limit state as defined in 44.2.2.

$V_{u1}$ Ultimate shear force due to diagonal compression in the web.

$V_{u2}$ Ultimate shear force failure due to tension in the web.

Verification of failure due to diagonal compression in the web $V_{rd} \leq V_{u1}$ should be performed at the edge of the support and not at its axis.

In those members without shear reinforcement, verification of failure due to diagonal compression in the web is not necessary.

Verification of failure due to tension in the web $V_{rd} \leq V_{u2}$ is performed on a section situated at a distance of one effective depth from the edge of the direct support.

### 44.2.3.1 Calculation of $V_{u1}$

Shear stress at failure due to diagonal compression in the web is obtained from the following expression:

$$V_{u1} = K\, f_{1cd}\, b_0\, d\, \frac{cotg\ \theta + cotg\ \alpha}{1 + cotg^2\ \theta}$$

where:

$f_{1cd}$ Design value of concrete cylinder compressive strength.

$$f_{1cd} = 0{,}60\, f_{cd}$$

$b_0$ The net minimum element width as defined in accordance with 40.3.5.

$K$ is the coefficient of reduction due to effect of axial force.

$$K = \frac{5}{3}\left(1 + \frac{\sigma'_{cd}}{f_{cd}}\right) \leq 1{,}00$$

where:

$\sigma'_{cd}$ is the design value of the compressive stress in the concrete (positive tension).

$$\sigma'_{cd} = \frac{N_d}{A_c}$$

$N_d$ Design value of the axial force (positive tension), including the prestressing with its design value.

$A_c$ The total concrete cross section area.

$\alpha$ The angle between the member and the member axis (figure 44.2.3.1.a).

$\theta$ The angle between the concrete compression struts and the member axis (figure 44.2.3.1.a). A value should be adopted that meets the following:

$$0{,}5 \leq cotg\ \theta \leq 2{,}0$$

Figure 44.2.3.1.a

SHEAR REINFORCEMENT

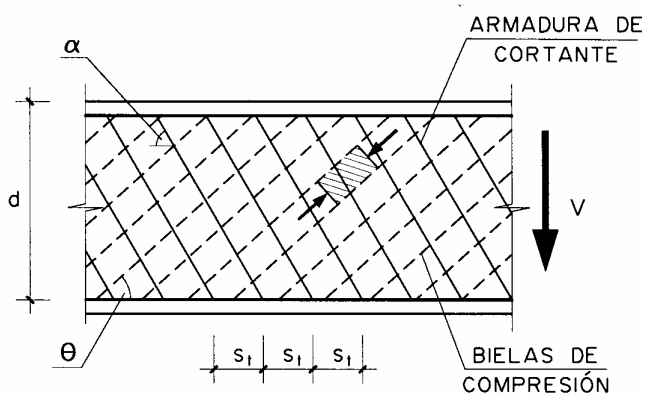


COMPRESSION STRUTS

**COMMENTS**

If, in the section under consideration, the web width is not constant, then the smallest width presented by the section at a height equal to three quarters of the effective depth measured from the tension reinforcement, is adopted for the value of $b_0$.(Figure 44.2.3.1.b).

Figure 44.2.3.1.b

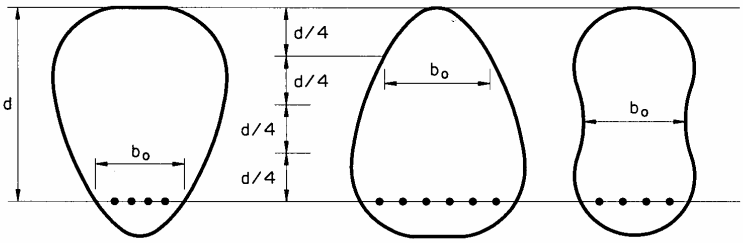


When several groups of transverse reinforcements exist simultaneously, with various inclinations with respect to the member axis, then for the purpose of obtaining $V_{u1}$, that defined by the following expression may be adopted as the average value for $\alpha$.

$$cotg\ \alpha = \frac{\Sigma A_i\ cotg\ \alpha_i}{\Sigma A_i}$$

where:

$A_i$ is the section area per unit of length of the reinforcements that form an angle $\alpha_i$ with the member's axis.

In members under compression, as i.e. columns of buildings or piers of bridges, the value of $\sigma'_{cd}$ may be estimated by taking into account the force assumed by compressed longitudinal reinforcement, after the following expression:

$$\sigma'_{cd} = \frac{(N_d - A'_s f_{yd})}{A_c}$$

where

$A'_s$ Area of the reinforcement under compression
$f_{yd}$ design strength of reinforcement $A'_s$ (40.2):
for reinforcing steel $f_{yd} = \sigma_{sd}$
for prestressing steel $f_{yd} = \sigma_{pd}$

In general, for the building columns with normal dimensions and internal forces, the unit value may be adopted as the coefficient of reduction *K*.

In the normal case where the reinforcements form an angle $\alpha$ = 90° and $\theta$ = 45º is adopted as the compression strut angle, the expression for the failure shear strength by diagonal compression in the web is given by:

$$V_{u1} = 0{,}30\ f_{cd}\ b_0\ d$$

## 44.2.3.2 The calculation of $V_{u2}$

### 44.2.3.2.1 Members without shear reinforcement

Ultimate shear force failure due to tensile force in the web is given by:

$$V_u 2 = \left[\ 0{,}12\ \xi\ (\ 100\ \rho_l\ f_{ck}\ )^{1/3} - 0{,}15\ \sigma'_{cd}\ \right] b_0\ d$$

with $f_{ck}$ expressed in N/mm$^2$, where:

$\xi = 1 + \sqrt{\frac{200}{d}}$ with $d$ in mm.

$\rho_l$ Tension reinforcement ratio of bonded reinforcing and prestressing longitudinal reinforcement under tension, anchored at a distance equal to, or greater than, $d$ from the section under analysis.

$$\rho_l = \frac{A_s + A_p \frac{f_{yp}}{f_{yd}}}{b_0 \; d} \leq 0{,}02$$

### 44.2.3.2.2 Members with shear reinforcement

Ultimate shear force failure due to traction in the web is given by:

$$V_{u2} = V_{cu} + V_{su}$$

where:

$V_{su}$ Contribution of web transverse reinforcement to shear.

$$V_{su} = z \; sen \; \alpha \, ( \, cotg \, \alpha + cotg \, \theta \, ) \, \Sigma \, A_\alpha \, f_{y\alpha,d}$$

where:

$A_\alpha$ Area per unit length of each group of reinforcement that forms an angle $\alpha$ with the main axis of the member (figure 44.2.3.1).

$f_{y\alpha,d}$ Design yield stress of reinforcement $A_\alpha$ (40.2).

- For reinforcing steel

$$f_{y\alpha,d} = \sigma_{sd}$$

- For prestressing steel

$$f_{y\alpha,d} = \sigma_{pd}$$

$z$ Lever arm of internal forces. In the absence of more precise design data, the approximate value of $z = 0.9d$ may be adopted.

$V_{cu}$ Concrete contribution to shear strength capacity.

$$V_{cu} = \left[ 0{,}10 \, \xi \, ( \, 100 \, \rho_l \, f_{ck} \, )^{1/3} - 0{,}15 \, \sigma'_{cd} \right] b_0 \, d \, \beta$$

with $f_{ck}$ expressed in N/mm$^2$, where:

$$\beta = \frac{2 \, ctg \; \theta - 1}{2 \, ctg \, \theta_e - 1} \qquad \text{if } 0.5 \leq ctg\theta < ctg\theta_e$$

$$\beta = \frac{ctg \; \theta \; - \; 2}{ctg \; \theta_e \; - \; 2} \qquad \text{if } ctg\theta_e \leq ctg\theta \leq 2.0$$

$\theta_e$ is the crack inclination reference angle, obtained from the expression:

$$cotg \, \theta_e = \frac{\sqrt{f^2_{ct,m} - f_{ct,m} \, ( \, \sigma_{xd} + \sigma_{yd} \, ) + \sigma_{xd} \, \sigma_{yd}}}{f_{ct,m} - \sigma_{yd}} \quad \begin{cases} \geq \; 0{,}5 \\ \leq \; 2{,}0 \end{cases}$$

$f_{ct,m}$ Mean value of the tensile strength of concrete (39.1) considered as being positive.

$\sigma_{xd}$ $\sigma_{yd}$ Perpendicular design stresses at the level of the section centroid, parallel to the member's main axis and to the shear stress $V_d$ respectively. The stresses $\sigma_{xd}$ and $\sigma_{yd}$ are obtained from the design actions, including prestressing, in accordance with the Theory of Elasticity, assuming that the concrete is not cracked and by taking tensile stresses as being positive.

**COMMENTS**

In the frequent case where $\sigma_{yd}$ = 0, the expression of cot $\theta_e$ is:

$$cotg\ \theta_e = \sqrt{1 - \frac{\sigma_{xd}}{f_{ct,m}}}$$

In the usual case of reinforced concrete members subjected to pure or combined bending with cross-sectional reinforcement arranged with $\alpha$=90°, for $\theta$=$\theta_e$=45°, and ignoring the favourable effect of the compression, the contribution of the concrete to resistance to the shear force will be given by:

$$V_{cu} = 0{,}10\ \xi\ (\ 100\ \rho_l\ f_{ck}\ )^{1/3}\ b_0\ d$$

and the reinforcement contribution would be:

$$V_{su} = A_{90}\ f_{y\,90,d}\ 0{,}90\ d$$

### 44.2.3.3 Special loading cases

When a beam is subjected to a hanging load applied at a level whereby it lies outside the compression flange of the beam, suitable transverse reinforcement and suspension reinforcement, should be arranged and suitable anchored in order to transfer the corresponding load to the compression flange.

Additionally, the end zones of prestressed members, especially in case of pre-tensioned steel anchored by bonding, it will be necessary to examine the progressive transfer of the prestressing force to the member, by assessing this force in each section.

**COMMENTS**

The effect of the prestressing force in shear force verification is double, since it reduces the force applied to the concrete $V_{rd}$ and introduces normal stress into the section which are favourable because they aid in reducing the main tension stresses. It is therefore, necessary to evaluate this prestressing force in a prudent fashion. Emphasis is therefore placed on the fact that in those zones of a member that are close to the anchorage points of tendons, particularly when this anchorage is achieved exclusively by bonding, the prestressing force progressively increases from a zero value at the end of the section, until it reaches its total value at a certain distance away. It frequently occurs that the support sections are found included in this zone and, when verifying the shear force, it is essential to take into account the reduced value of this prestressing force.

Attention is also called to the fact that, in structures where shortening co-action exists in the prestressing direction, it may be forecast that the prestressing axial force is considerably reduced, so its evaluation should therefore be carried out in a prudent manner.

### 44.2.3.4 Reinforcement arrangement

#### 44.2.3.4.1 Cross-sectional reinforcement

The distance $s_t$ between transverse reinforcement bars (figure 44.2.3.1.a) should satisfy the following conditions in order to guarantee that concrete subjected to diagonal compression is adequately contained.

$s_t \leq 0{,}80\ d \leq 300$ mm $\qquad si\ V_{rd} \leq \frac{1}{5} V_{u1}$

$s_t \leq 0{,}60\ d \leq 300$ mm $\qquad si\ \frac{1}{5}\ V_{u1} < V_{rd} \leq \frac{2}{3}\ V_{u1}$

$s_t \leq 0{,}30\ d \leq 200$ mm $\qquad si\ V_{rd} > \frac{2}{3}\ V_{u1}$

If compression reinforcement exists and it is taken into account in the design, the stirrups should also comply with the specifications of Article 42.

For effective control of diagonal cracking of linear member webs due to tangential stresses, the distances between transverse reinforcement bars indicated in 49.3 should be respected.

In general, the linear elements should include cross-sectional reinforcement in an effective manner.

In all cases, the length along which stirrups are placed should extend beyond the section where, in theory, they are no longer necessary by a distance equal to half the depth of the member. In the case of supports, the stirrups should be placed up to their edges.

Shear reinforcement should form an angle of between 45° and 90° with the beam axis, inclined in the same direction as the principal tensile stress produced by external loading, at the level of the centroid of the section of the beam, which is assumed, for this purpose, not to be cracked.

Transverse reinforcement bars may be either prestressed or not, and either type may be used in isolation or together.

The minimum quantity of such reinforcement should satisfy the condition:

$$\sum \frac{A_\alpha\, f_{y\alpha,d}}{sen\ \alpha} \geq 0{,}02\ \ f_{cd}\, b_0$$

At least one third of the required shear reinforcement and in all cases, the minimum indicated amount, should be arranged in the form of stirrups that form an angle of 90° with the beam axis.

### 44.2.3.4.2 Longitudinal reinforcement

Longitudinal reinforcement for bending should be able to withstand an increase in tension, with respect to that caused by $M_d$, equal to:

$$\Delta\ T = V_{rd}\, cotg\ \theta - \frac{V_{su}}{2} (\ cotg\ \theta + cotg\ \alpha\ )$$

This specification is automatically met if the curve of design moments $M_d$ is offset by an amount equal to:

$$s_d = z \left( cotg\ \theta - \frac{1}{2} \frac{V_{su}}{V_{rd}} (\ cotg\theta + cotg\ \alpha\ ) \right)$$

in the most unfavourable direction (figure 44.2.3.4.2).

Where shear reinforcement does not exist, $V_{su}$ = 0 from the previous expressions should be taken.

Figure 44.2.3.4.2

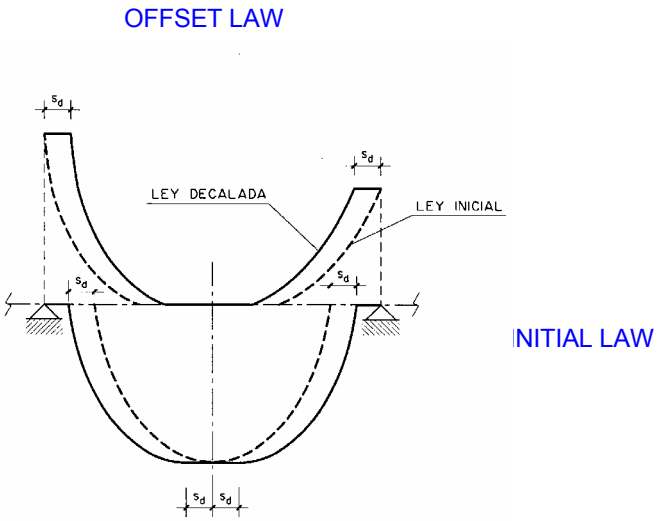


**COMMENTS**

The classic rule of curve of design moments offset by an amount equal to the effective depth (figure 44.2.3.4.2) is on the side of safety for values of $\theta$=45º.

## 44.2.3.5 Longitudinal shear between flanges and web of a beam

For the design, the reinforcement connecting the flanges and web in the heads of T, I, box or similar beams, the Strut-and-Tie method should generally be used (Article 40).

In order to determine this longitudinal shear stress, plastic redistribution may be assumed in a zone of the beam of length $a_r$ (Figure 44.2.3.5.a).

Figure 44.2.3.5.a

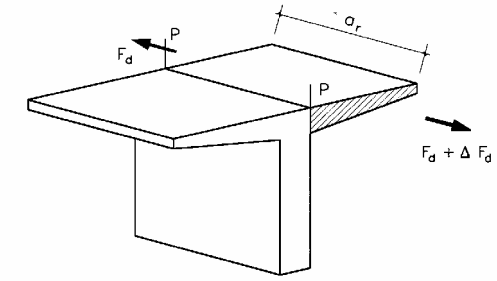


The mean longitudinal force per unit length that should be resisted is given by:

$$S_d = \frac{\Delta F_d}{a_r}$$

where:

$a_r$ is the plastic redistribution length under consideration. The curve of moments in length $a_r$ should have a monotonous up or down variation. The moment points of change of sign at least should always be adopted as limits of the zone $a_r$.

$\Delta F_d$ is the variation over distance $a_r$ of the longitudinal force acting on the section of the flange external to plane P.

In the absence of more thorough calculations, the following conditions should be satisfied:

$$S_d \leq S_{u1}$$
$$S_d \leq S_{u2}$$

where:

$S_{u1}$ Ultimate longitudinal shear force due to diagonal compression in plane P.

$$S_{u1} = 0,5\ f_{1cd}\ h_0$$

where:

$f_{1cd}$ Design value of concrete cylinder compressive strength (40.3.2) with a value of:
$f_{1cd}$=0.60$f_{cd}$ for compressed flanges;
$f_{1cd}$=0.40$f_{cd}$ for flanges under tension.

$h_0$ Flange thickness in accordance with 40.3.5.

$S_{u2}$ Ultimate longitudinal shear force due to tension in plane P.

$$S_{u2} = S_{su}$$

where:

$S_{su}$ Contribution of the reinforcement perpendicular to plane P to resisting the longitudinal shear.

$$S_{su} = A_P f_{yP,d}$$

$A_P$ Area of prestressing steel per unit of length perpendicular to plane P (figures 44.2.3.5.b and c).

$f_{yP,d}$ Design strength of prestressing steel $A_P$.

$f_{yP,d} = \sigma_{sd}$ for reinforcing steel;

$f_{yP,d} = \sigma_{pd}$ for prestressing steel.

In the case of longitudinal shear between flanges and web combined with transverse bending, the reinforcement required for both concepts should be calculated and the greater of the two amounts should be employed.

**COMMENTS**

The presented formulae correspond to the general method of struts and ties as established in Article 40. The general expressions have been established for an angle $\theta$ of strut inclination of 45° and an angle $\alpha$ of reinforcement inclination of 90°. Figures 44.2.3.5.b and 44.2.3.5.c represent the design models corresponding to the upper flange of a T-beam with the flange being subjected to tension and compression respectively.

Figure 44.2.3.5.b

BENDING LAW

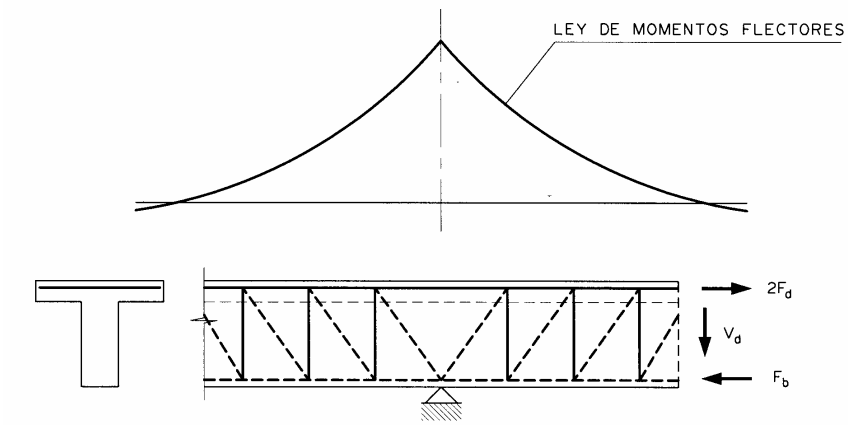


ELEVATION




ALZADO

PLANT

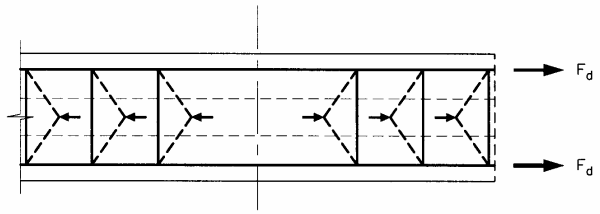


PLANTA

b) FLANGE IN TENSION

b) ALA EN TRACCIÓN

Figure 44.2.3.5.c

BENDING LAW

ELEVATION

PLAN

FLANGE IN TENSION

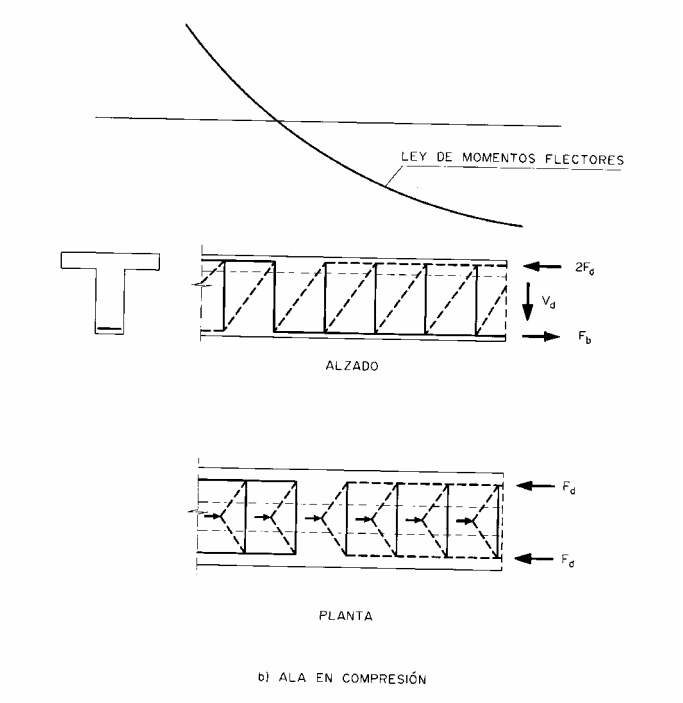


## Article 45 Limit State of Failure due to torsion in linear elements

### 45.1 General considerations

The specifications included in this article apply solely to linear elements subjected to pure torsion or the combined stresses of torsion and both shear and axial bending

For the purposes of this article, linear elements are those where the distance between points of zero moment is equal to, or greater than, two and a half times their total depth, and their width is equal to, or less than, four times this depth, with their main axes being either straight or curved.

The two-dimensional bending states ($m_x$, $m_y$ and $m_{xy}$) in flat slabs or slabs should be dimensioned in accordance with Article 42, taking into account the main directions of stresses and the directions in which the reinforcement is arranged.

When the static equilibrium of a structure depends on the resistance to torsion of one or more elements within the structure, these should be dimensioned and verified in accordance with this article. When the static equilibrium of a structure does not depend on the torsional resistance of one or more elements within the structure, it will only be necessary to verify this Limit State in those elements where the torsional stiffness was taken into consideration in internal forces design.

To prevent excessive cracking in linear members, the minimum reinforcement as indicated in Article 49 should be employed

**COMMENTS**

The stress state of the member prior to cracking is essentially transformed when cracking does appear, in function of the reinforcement arrangement, with the torsional stiffness of the member being reduced to a small fraction of that corresponding to the member without cracking.

The article establishes the arrangement of the longitudinal and transverse reinforcements that are generally used in prismatic members subjected to torsion, and the design method established in the article is valid for these situations.

Electro-welded fabrics may be employed which serve as cross-sectional reinforcement and also as partial or total longitudinal reinforcement.

Other arrangements of longitudinal and transverse reinforcement may be employed, making use of design methods that provide the same degree of safety as established here.

## 45.2 Pure torsion

### 45.2.1 Definition of design section

The torsional resistance of sections is calculated by using a thin-walled, closed section. Therefore, the solid sections are replaced by equivalent thin-walled sections. Sections of complex shape, such as T-sections, are divided into several sub-sections, each of which is modelled as an equivalent thin-walled section, and the total torsional resistance is calculated as the sum of the capacities of the various members. The section should be subdivided in order to maximise the calculated stiffness. In areas close to supports, those elements of the section where the stresses are not transmitted directly to the supports cannot be considered to contribute to the torsional resistance of the section.

Figure 45.2.1

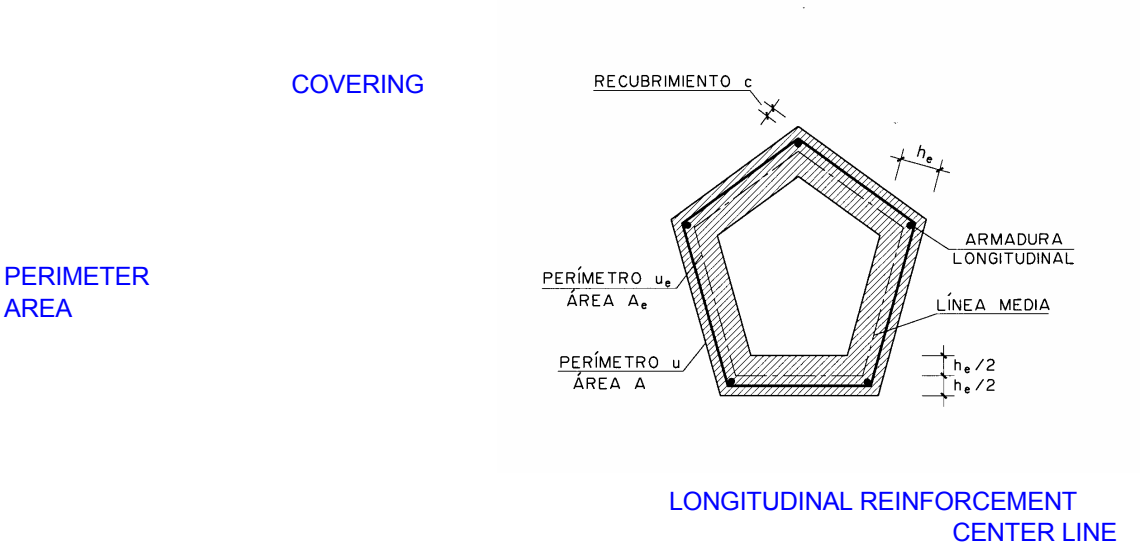


The effective thickness $h_e$ of the wall of the design section (figure 45.2.1) would be:

$$h_e \leq \frac{A}{u} \begin{cases} \leq h_o \\ \geq 2c \end{cases}$$

where:

*A* is the area of the cross-section within the outer circumference, including inner holes or void areas.
*u* is the external cross-section circumference.
$h_o$ is the actual thickness of the wall in the case of hole sections.
*c* the covering over longitudinal reinforcement.

A value $h_e$ which is less than *A/u* may be used, always provided that it satisfies the minimum conditions given above and allows the concrete compression requirements set out in 45.2.2.1 to be met.

### 45.2.2 Verifications that should be performed

The Limit State of Failure due to torsion will be reached when either the compressive strength of the concrete or the tensile strength of the reinforcement arrangement is exhausted. It is consequently necessary to verify that both the following conditions are simultaneously satisfied:

$$T_d \leq T_{u1}$$
$$T_d \leq T_{u2}$$
$$T_d \leq T_{u3}$$

where:

$T_d$ Design value of the torsional moment for the section.
$T_{u1}$ Maximum ultimate torsional moment that the compressed concrete struts are capable of withstanding.
$T_{u2}$ Maximum ultimate torsional moment that the transverse reinforcements are capable of withstanding.
$T_{u3}$ Maximum ultimate torsional moment that the longitudinal reinforcements are capable of withstanding.

Torsional reinforcement is assumed to be composed of transverse reinforcement made up of closed stirrups located in planes perpendicular to the main axis of the member. The longitudinal reinforcement will consist of reinforcing or prestressing steel that is parallel to the main axis of the member and distributed evenly with spacing no greater than 30 cm around the periphery of the effective hollow section or in a double layer in the outer and inner side of the wall of the effective or actual section. At least one longitudinal bar should be placed in each corner of the actual section to ensure that the longitudinal forces exerted by the compression struts are transmitted to the transverse reinforcement.

#### 45.2.2.1 Obtaining $T_{u1}$

The ultimate torsional stress that the compressed struts can withstand is obtained from the following expression:

$$T_{u1} = \alpha\, f_{1cd}\, A_e\, h_e \frac{cotg\,\theta}{1 + cotg^2\,\theta}$$

where:

$f_{1cd}$ Design value of concrete cylinder compressive strength.

$$f_{1cd} = 0{,}60\, f_{cd}$$

$\alpha$ 1,20 if there are only stirrups along the outer periphery of the member;
1,50 if closed stirrups are placed in both sides of the wall of the equivalent hollow section or actual cavity section.

$\theta$ is the angle between the concrete compression struts and the main axis of the member. A value should be adopted that meets the following:

$$0{,}4 \leq cotg\,\theta \leq 2{,}5$$

$A_e$ The area within the centre line of the design effective hollow section (figure 45.2.1).

### 45.2.2.2 Obtaining $T_{u2}$

The torque that the transverse reinforcement is able to withstand is given by:

$$T_{u2} = \frac{2\,A_e\,A_t}{s_t}\,f_{y\,t,d}\,cotg\,\theta$$

where:

$A_t$ The area of the steel used as stirrups or transverse reinforcement.
$s_t$ is the longitudinal spacing between stirrups or transverse reinforcement ~~links or~~ bars.
$f_{yt,d}$ Design yield stress of the reinforcement steel $A_t$ (40.2).

- For reinforcing steel.

$$f_{y\,t,d} = \sigma_{sd}$$

- For prestressing steel.

$$f_{y\,t,d} = \sigma_{pd}$$

### 45.2.2.3 Obtaining $T_{u3}$

The torque that the longitudinal reinforcement can resist may be calculated using:

$$T_{u3} = \frac{2\,A_e}{u_e}\,A_l\,f_{yl,d}\,tg\;\theta$$

where:

$A_l$ the area of the longitudinal reinforcement.
$f_{yl,d}$ Design yield stress of the longitudinal reinforcement steel $A_t$ (40.2).

- For reinforcing steel.

$$f_{y\,l,d} = \sigma_{sd}$$

- For prestressing steel.

$$f_{y\,l,d} = \sigma_{pd}$$

$u_e$ The centre line perimeter of the design effective hollow section $A_e$ (f~~F~~igure 45.2.1).

### 45.2.2.4 Warping caused by torsion

In general, the stresses caused by the restrained torsional warping in the design of linear concrete members may be ignored.

### 45.2.3 Reinforcement arrangement

The longitudinal spacing between torsional stirrups $s_t$ should not exceed:

$$s_t \le \frac{u_e}{8}$$

and should satisfy the following conditions in order to guarantee suitable confinement of concrete subjected to diagonal compression:

$s_t \le 0{,}80\,a \le 300$ mm $\qquad si\;\; T_d \le \frac{1}{5}\,T_{u1}$

$s_t \leq 0{,}60\ a \leq 300$ mm $\qquad si\ \frac{1}{5}\ T_{u1} < T_d \leq \frac{2}{3}\ T_{u1}$

$s_t \leq 0{,}30\ a \leq 200$ mm $\qquad si\ T_d > \frac{2}{3}\ T_{u1}$

where $a$ is the length of the smallest side of the circumference $u_e$.

## 45.3 Interaction between torsion and other stresses

### 45.3.1 General Method

The same procedure as in pure torsion (45.2.1) should be used to define a design effective hollow section. The perpendicular and tangential stresses caused by the actions on this section are calculated by means of the conventional elastic or plastic methods.

Once the stresses have been found, the reinforcement required in any wall of the design effective hollow section may be determined by means of the plane stress distribution formulae. The main compressive stress in the concrete may also be determined. If the reinforcement obtained in this way is not feasible or suitable, the obtained stresses may be replaced with a system of equivalent static forces for a particular area and these may be used for the reinforcement. In this case, verification will be required of the consequences of replacement on singular areas like cavities or beam ends.

The principal compressive stresses $\sigma_{cd}$ obtained in the concrete in the various walls of the design effective hollow section should satisfy:

$$\sigma_{cd} \leq \alpha\ f_{1cd}$$

where $\alpha$ and $f_{1cd}$ are those defined in 45.2.2.1 and 40.3.

### 45.3.2 Simplified methods

#### 45.3.2.1 Torsion combined with bending and axial stress

The longitudinal reinforcement required for torsion and flexural compression or flexural tension should be designed separately, on the basis of the assumption that the two types of stress act independently of each other. The reinforcement determined in this fashion should be combined in accordance with the following rules:

a) In the zone under tension due to the compound bending, the longitudinal reinforcement for torsion should be added to that required for bending and axial stresses.

b) If, in the zone under compression due to the combined bending, the mechanical capacity of the torsional reinforcement to be employed is less than the compressive stress in the concrete due to the combined bending, it will not be necessary to add any reinforcement for the torsion. Otherwise, the difference between the two values should be added.

With respect to the compressions in the concrete, it should be verified that the main compressive stress $\sigma_{cd}$ at the critical point in the section satisfies the following:

$$\sigma_{cd} \leq \alpha\ f_{1cd}$$

where $\alpha$ and $f_{1cd}$ are those defined in 45.2.2.1.

$\sigma_{cd}$ may be obtained by using the compressive stress $\sigma_{md}$ due to the bending at the point under consideration and the tangential torsional stress at that same point, and calculated in accordance with:

$$\tau_{td} = \frac{T_d}{2\,A_e\,h_e}$$

The main compressive stress is then:

$$\sigma_{cd} = \frac{\sigma_{md}}{2} + \sqrt{\left(\frac{\sigma_{md}}{2}\right)^2 + \tau_{td}^{\,2}}$$

### 45.3.2.2 Torsion combined with shear

When acting together, design torque and shear should satisfy the following condition in order to guarantee that excessive compressions do not occur in the concrete.

$$\left(\frac{T_d}{T_{u1}}\right)^{\beta} + \left(\frac{V_{rd}}{V_{u1}}\right)^{\beta} \leq 1$$

where:

$$\beta = 2\left(1 - \frac{h_e}{b}\right)$$

*b* is the width of the element, equal to the total width for a solid section and the sum of the web widths for a box section.

The calculations for obtaining the stirrups should be performed independently for torsion in accordance with 45.2.2.2 and shear in accordance with 44.2.3.2.2. The same angle $\theta$ for the compression struts should be used in both calculations. The reinforcements calculated in this way should be added together; it should remembered that the torsional reinforcement must be placed in the outer periphery of the section, whereas this is not mandatory for the shear reinforcement.

**COMMENTS**

The proposed method is based on the assumption of a design effective hollow section and on considering the longitudinal shear flows produced by torsion and shear in each of the walls. The distribution of these flows is not the same for the two types of forces, so that the interaction should be considered in those walls where the flows add (for example, in the webs of the section), but not in those where it does not occur (for example, in horizontal slabs). In addition, the thickness of each wall should be taken into account when determining the values of $V_{u1}$ and $T_{u1}$.

## Article 46 Punching Limit State

### 46.1 General considerations

The resistance to the transverse effects produced by concentrated loading (loads or reactions) acting on flat slabs without transverse reinforcement may be verified by the use of a nominal tangential stress on a critical surface concentric to the loaded area.

The critical area is defined at a distance of 2*d* from the perimeter of the loaded area or support, where *d* is the effective depth of the slab (figures 46.1.a and 46.1.b).

**COMMENTS**

Tangential stress on a critical surface does not have any physical meaning, and only constitutes an empirical method that enables the available experimental results to be suitably represented.

The critical perimeter to be taken into consideration for various support situations is shown in figures 46.1 and in 46.1.b.

Figure 46.1.a Critical perimeter in interior supports

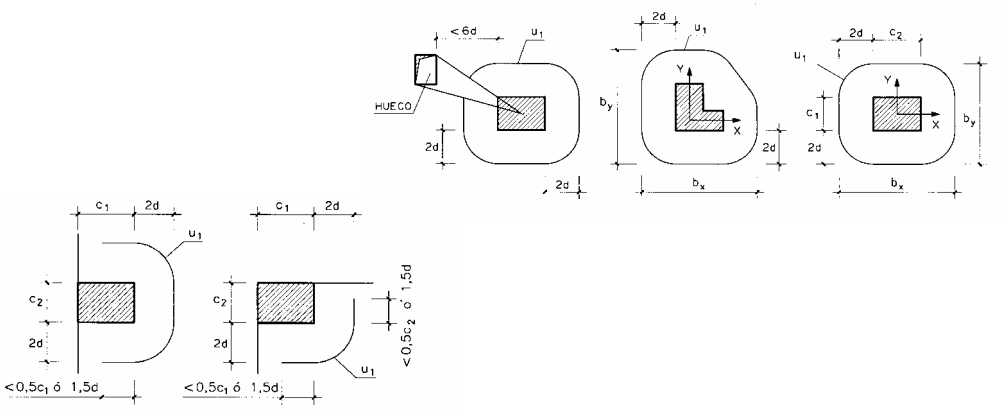


Figure 46.1.b Critical perimeter in edge and corner supports

## 46.2 Flat slabs without reinforcement for punching shear

Reinforcement for punching shear is not necessary if the following condition is met:

$$\tau_{sd} \leq \tau_{rd}$$

where:

$\tau_{sd}$ Design nominal tangential stress in the critical perimeter.

$$\tau_{sd} = \frac{F_{sd,ef}}{u_1 d}$$

$F_{sd,ef}$ Design effective punching shear, taking into account the effect of the moment transferred between the slab and support.

$$F_{sd,ef} = \beta F_{sd}$$

$\beta$ Coefficient that takes into account the effects of load eccentricity. When no moments are transferred between slab and support, it has a value of 1.00. In the interests of simplicity, when there are moments transferred between slab and support, β may be taken as being equal to 1.15 in interior supports, 1.40 in edge supports, and 1.50 in corner supports.

$F_{sd}$ Design punching shear. It is obtained as the support reaction. In the case of prestressed slabs, the vertical component of the prestress should be included.

$u_1$ Critical perimeter as defined in figures 46.1.a and 46.1.b.

$d$ Effective slab depth.

$\tau_{rd}$ Maximum shear strength in the critical perimeter, with $f_{ck}$ in N/mm$^2$.

$$\tau_{rd} = 0,12\xi \left(100\, \rho_l\, f_{ck}\right)^{1/3}$$

$\rho_l$ Geometric quantity of longitudinal reinforcement in the slab, which is calculated from:

$$\sqrt{\rho_x \rho_y}$$

with $\rho_x$ and $\rho_y$ being the quantities in two perpendicular directions. In each direction, the quantity to be taken into consideration is that existing in a width equal to the dimension

of the support plus 3*d* on each side of the support, or as far as the edge of the slab in the case of an edge or corner support.

$\xi$ $1+\sqrt{200/d}$ with *d* in mm.

**COMMENTS**

When there are moments transferred between slab and the supports, a part of these forces is transmitted by tangential stresses (see 22.4.6), depending on the support's geometry. The method proposed in the article is a simplification, however alternatively, any procedure may be employed which provides a more precise evaluation of $\tau_{sd}$.

$F_{sd}$ may be reduced by discounting the exterior loads and the equivalent prestressing forces that act within the perimeter located at a distance of *h/2* of the support section or loaded area.

In the case of footing, $F_{sd}$ may be reduced by discounting the net vertical force that acts within the critical perimeter. This force is equal to the force produced by the ground pressure less the actual weight of the foundation elements, within the critical perimeter.

## 46.3 Flat slabs with reinforcement for punching shear

When punching shear reinforcement is necessary, two verifications should be performed: in the area with transverse reinforcement, in accordance with 46.3.1, and in the following adjacent area without transverse reinforcement, in accordance with 46.3.2.

### 46.3.1 Area with reinforcement for punching shear

In the area with punching shear reinforcement, the reinforcement should be dimensioned by taking into account the provisions of 44.3.2.2, using the following values for $A_0$ and $b_0$:

$$b_0 = u_1$$

$$A_\alpha = \frac{A_{sw}}{s}$$

where:

$A_{sw}$ is the total area of punching shear reinforcement in a perimeter that is concentric to the support or loaded area.

*s* the distance in a radial direction between two concentric perimeters of reinforcement. (figure 46.3.2).

### 46.3.2 Area outside the punching shear reinforcement

It is necessary to verify that this type of reinforcement is not required in the area outside the punching shear reinforcement.

$$F_{sd,ef} \leq 0,12\,\xi\,(100\,\rho_l\,f_{ck})^{1/3}\,u_{n,ef}\,d$$

where:

$u_{n,ef}$ the perimeter as defined in figure 46.3.2.

$\rho_l$ the ratio of longitudinal reinforcement that passes through the perimeter $u_{n,el}$.

At the distance at which this condition is verified, it is assumed that the effect of the moment transferred between support and slab by tangential stresses has disappeared, so that $F_{sd,el}$ only takes into account the effect of the vertical load $F_{sd}$.

Figure 46.3.2 Arrangement in plan view of punching shear reinforcement

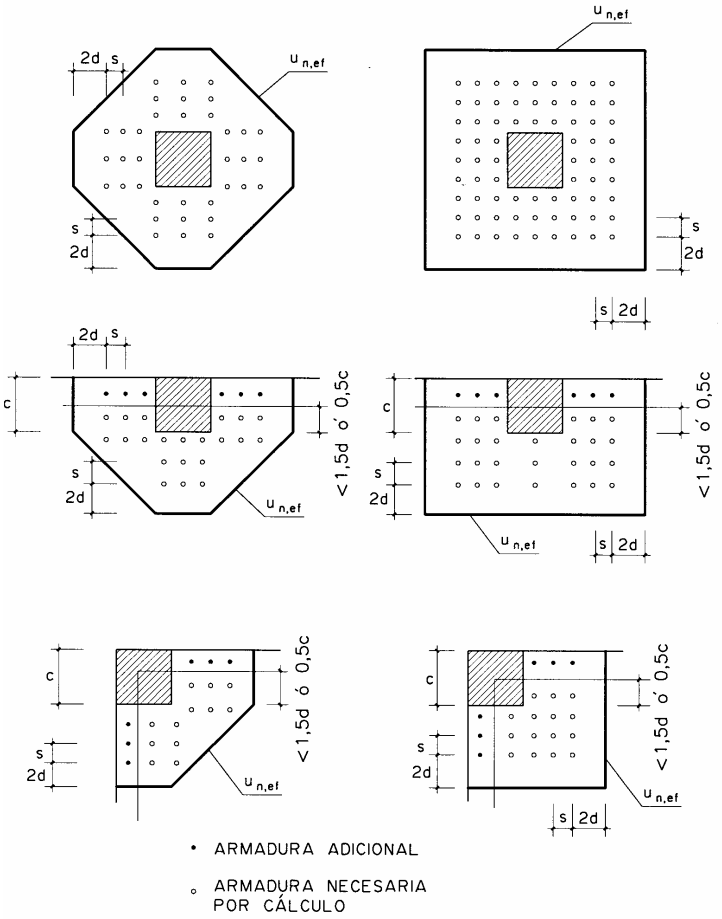


ADITIONAL REINFORCEMENT

DESIGN REINFORCEMENT

## 46.4 Maximum strength

In all cases it should be verified that the maximum punching shear stress does not exceed a value of:

$$\frac{F_{sd,ef}}{u_0\, d} \leq f_{1cd}$$

where:

$f_{1cd}$ Design value of concrete cylinder compressive strength.

$$f_{1cd} = 0{,}30\, f_{cd}$$

$u_0$ is the verification perimeter (figure 46.4). For interior supports, $u_0$ is the cross-sectional perimeter of the support. For edge supports:

$$u_0 = c_1 + 3d \leq c_1 + 2\, c_2$$

where $c_1$ and $c_2$ are the support dimensions. For corner supports:

$$u_0 = 3d \leq c_1 + c_2$$

Figure 46.4 Critical perimeter $u_0$

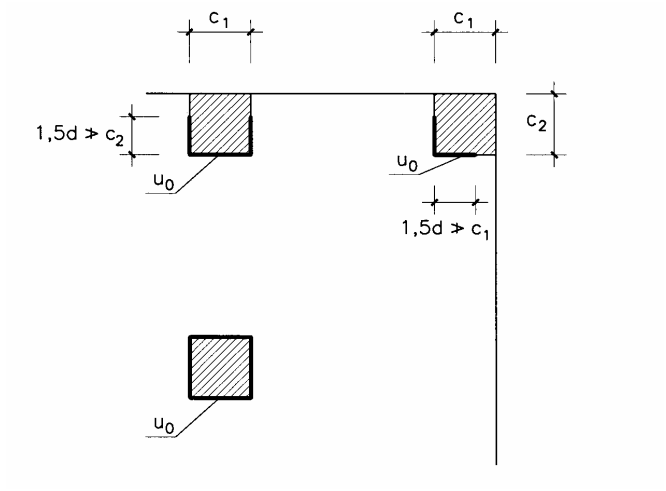


## 46.5 Reinforcement arrangement

Punching shear reinforcement should be defined in accordance with the following criteria:

- The punching shear reinforcement should consist of stirrups, vertical shear assemblies or bent bars
- The construction arrangement should comply with the specifications of figure 46.5.
- The punching shear reinforcement should be anchored from the centroid of the compression block and below the longitudinal tension reinforcement. Anchoring of punching shear reinforcement requires careful study, especially in the case of thin flat slabs.

Figure 46.5 Details of punching shear reinforcement

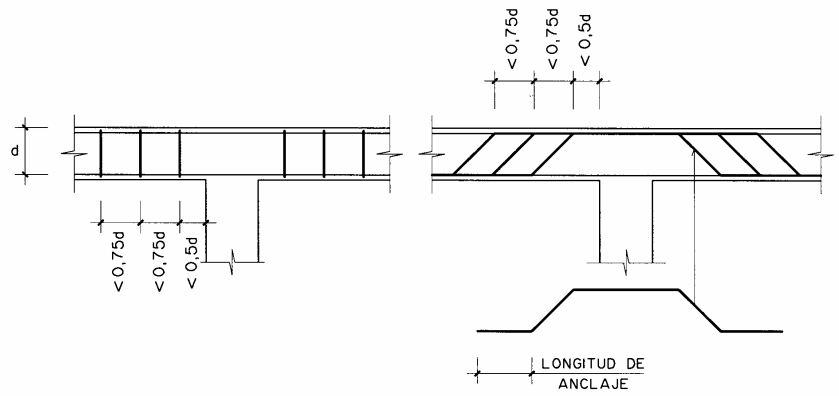


ANCHORAGE LENGTH

## Article 47 Limit State of Failure due to longitudinal shear at joints between concretes

### 47.1 General

The Limit State dealt with in this article is that caused by the longitudinal shear stress produced by the tangential action to which a joint between concretes is subjected.

### COMMENTS

In the case of joints without connected reinforcement, or with a very low amount (below the value specified in Article 47.2 in order to be able to take the reinforcement contribution into account), the section loses its longitudinal shear strength capacity (if there are no compression tensions perpendicular to the joint plane) once the bonding has been broken between the concretes at the joint.

In the case of joints with reinforcement (figure 47.1), the tangential stresses produce a thrust relative to the sides (due to the presence of irregularities in the joint, one surface attempts to ride over the other), which causes them to separate and causes tension in the reinforcement that connects the joint and compression in the contact side, which allows tangential tensions to be transmitted from one side to another.

Figure 47.1 Limit State of Failure due to longitudinal shear forces at joints between concretes

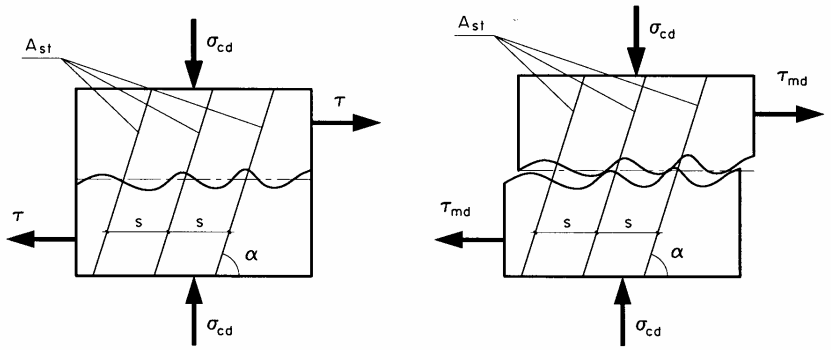


## 47.2 Longitudinal shear force resistance in joints between concretes

The longitudinal shear acting upon the joint in the section should meet the following conditions:

$$\tau_{md} \leq \beta\, f_{ct,d} + \frac{A_{st}}{sp} f_{y\alpha,d}\,(\,\mu\, sen\alpha + \cos\alpha\,) + \mu\,\sigma_{cd} \leq 0{,}25\, f_{cd}$$

where:

$\tau_{md}$ is the average value of the design longitudinal shear at the joint in the section under consideration.

$f_{cd}$ the design compression strength of the weakest concrete at the joint.

$A_{st}$ the cross-sectional area of the bars, efficiently anchored, that connect the joint.

$s$ the connecting bar spacing in accordance with the joint plane.

$p$ is the contact surface area per unit of length. This should not extend to areas where the gap is less than 20 mm, or less than the maximum aggregate diameter or where the covering is less than 30 mm.

$f_{y\alpha,d}$ is the design strength of the cross-sectional reinforcement in N/mm$^2$ ($\not> 400$N/mm$^2$).

$\alpha$ The angle formed between the connecting bar and the joint plane. The reinforcement should not be placed with $\alpha > 135^o$ or $\alpha < 45^o$.

$\sigma_{cd}$ design value of the compressive stress in the concrete perpendicular to the joint. $\sigma_{cd} > 0$ for compressive stresses. (If $\sigma_{cd} < 0$ , $\beta f_{ct,d} = 0$)

$f_{ct,d}$ the design tensile strength of the weakest concrete at the joint.

The values of $\beta$ and $\mu$ are defined in table 47.2.

Table 47.2
The values of coefficients $\beta$ and $\mu$ depending on the type of surface

| | Type of surface | |
|---|---|---|
| | Low roughness | High roughness |
| $\beta$ | 0.2 | 0.4 |
| $\mu$ | 0.6 | 0.9 |

For rough surfaces that are efficiently dovetailed together, $\beta$ may be taken as being equal to 0.5.

The contribution made by the connecting reinforcement to the resistance of the joint to longitudinal shear, in the section being studied, should only be taken into account if the geometric quantity of cross-sectional reinforcement meets the following condition

$$\frac{A_{st}}{sp} \geq \frac{0,38}{f_{y\alpha,d}} \quad (f_{y\alpha,d} \ en \ N/mm^2)$$

Under fatigue or dynamic stresses, the values that correspond to the contribution from cohesion between the concretes ($\beta f_{ct,d}$) should be reduced by 50%.

When there are tensile forces that are perpendicular to the surface of contact (for example, loads hanging from the lower face of a composite beam), the contribution from the cohesion between the concretes should be considered as being zero ($\beta f_{ct,d}$=0).

The longitudinal shear resistance capacity is based on the assumption of a minimum mean thickness of concrete of 50 mm on each side of the joint, as measured perpendicular to the plane of the joint, and with a local minimum thickness of 30 mm.

**COMMENTS**

In members subjected to bending stresses, consisting of concrete poured in two phases and with a horizontal joint between them (for example, a prefabricated section and another poured on-site), the design longitudinal shear at the joint may be determined from the formula:

$$\tau_{md} = \frac{V_d}{pz}$$

where:

$\tau_{md}$ Mean value of the longitudinal sliding shear at the joint in the section under consideration.
$V_d$ Design value of the shear force at the ultimate limit state for the section under consideration.
$z$ Lever arm of internal forces.

The formula leads to values on the side of safety, and may turn out to be excessively conservative in certain cases, especially if the joint is inside a compressed block at the ultimate limit state.

The given formula provides the longitudinal shear in a section. In ductile joints (47.3), a plastic redistribution of the longitudinal shear along the length of a joint may be acceptable, in such cases the mean longitudinal shear to be withstood is given by:

$$\tau_{md} = \frac{F_r}{p\,a_r}$$

where:

$F_r$ The longitudinal shear acting upon the joint area.
$a_r$ Plastic redistribution length under consideration. The shear forces' law in length $a_r$ should have a monotonous up or down variation. The moment points of change of sign should be adopted as limits of the zone $a_r$.

In those members where the shrinkage differential is significant, then the longitudinal shear induced in them should be evaluated. Special mention should be made of the free ends with no, or only a small amount of connecting reinforcement.

The contact surfaces between concretes is classified into two categories in accordance with its roughness and surface treatment.

- low roughness:

- Obtained by extrusion techniques.
- Brushing the fresh concrete, without disturbing the coarse aggregate-mortar bonding.

- high roughness:

- Formwork finishing of the fresh concrete using metallic fabric or unfolded tin sheet.
- Brushing the concrete with a metal bristle brush in a direction perpendicular to the longitudinal shear force.
- Tamping the concrete after vibration with a unfolded metallic lattice.
- A free surface obtained by internal vibration of the concrete to prevent the formation of surface grout.
- Water or sand jet treatment to leave the coarse aggregate visible.
- The existence of a crenellation or castellated transverse beam in the direction of the longitudinal shear.
- In the specific case of half beams obtained with a placing machine when the beam section is dove-tailed and the surface is open and rough (in the opposite case, the low surface roughness will be assimilated).

For joints between concretes poured in two phases, the surface classification is applied to the one onto which the second phase concrete is poured.

The cohesion between concretes is affected to a considerable extent by the presence of interposed materials (for example, dust, grout and water etc). In those joints without connecting reinforcement (in addition to its brittle nature) special care should be taken with the execution conditions, cleanliness and preparation of the surface to be concreted. With regards to the moisture level on the surface to be concreted, it is recommended that it tends to be dry rather than excessively wet.

In the case of connecting reinforcement perpendicular to the joint ($\alpha$=90$^o$), the expression for the longitudinal shear strength is given by:

$$\beta f_{ct,d} + \mu \left( \frac{A_{st}}{sp} f_{y\alpha,d} + \sigma_{cd} \right) \leq 0,25 f_{cd}$$

## 47.3 Reinforcement arrangement

A brittle joint is defined as one where the ratio of connecting reinforcement is lower than the value given in sub-section 47.2 for the contribution of the connecting reinforcement to be taken into account, and a ductile joint is one in which the geometric quantity of connecting reinforcement exceeds this value.

In brittle joints, the distribution of the connecting reinforcement should be made in proportion to the curve of shear stresses. In ductile joints, the hypothesis of stress redistribution along the joint may be assumed, although it is also advisable for the connecting reinforcement to be distributed in proportion to the distribution of shear forces.

In the case of members under bending stress cross-sectional connecting reinforcement should always be placed in cantilevers and the end quarters of spans.

## COMMENTS

In all cases, it should be verified that the correct anchorage has been employed for the connecting bars, taking into account that fact that a concrete thickness of less than 80 mm may require non-conventional anchorage mechanisms.

## Article 48 Fatigue Limit State

### 48.1 Principles

In structural elements subject to significant repeated variable actions, it may be necessary to verify that the effect of such actions does not endanger safety during the proposed service period.

The safety of a structural element or detail subject to fatigue is guaranteed if the general condition as established in 8.1.2 is satisfied. Separate verification should be carried out for the concrete and for the steel.

In normal structures it is not normally necessary to verify for this Limit State.

**COMMENTS**

In railway bridges with a prestressed concrete deck, where the repeated loads may be significant, this limit state verification is not performed if the structure project prevents the decompression of the sections for the rare action combination. In this way, the variation of reinforcement stress will be very small and there insensitive to this type of phenomenon.

### 48.2 Verifications to be performed

#### 48.2.1 Concrete

For fatigue purposes, the produced maximum compression stress values, both for normal stresses and for tangential stresses (compressed struts), due to the permanent loads and live loads that produce fatigue should be limited.

For elements subjected to shear forces without transverse reinforcement, the strength capacity due to the fatigue effect should also be limited.

The maximum values of compressive strength and strength capacity to shear forces is defined in accordance with existing experimentation, or where applicable, with proven criteria described in the technical literature.

**COMMENTS**

For the calculation of longitudinal stresses in compressed concrete, a linear behaviour should be taken into consideration for the compressed concrete and the reinforcement and the tensile strength of concrete may be ignored. The formulae in Appendix 9 may be employed for rectangular or “T” shaped reinforced concrete.

#### 48.2.2 Reinforcing and prestressing steel

In the absence of stricter criteria based on, for example, the theory of fracture mechanics, the maximum variation in stress, $\Delta\sigma_{sf}$, due to variable imposed loads that cause fatigue (13.2) should be less than the fatigue limit, $\Delta\sigma_d$, defined in 38.10.

$$\Delta\sigma_{sf} \leq \Delta\sigma_d$$

**COMMENTS**

For the calculation of longitudinal stresses in the reinforcement, a linear behaviour should be taken into consideration for the compressed concrete and the reinforcement and the strength capacity of the stressed concrete may be ignored. The formulae in Appendix 9 may be employed for rectangular or “T” shaped reinforced concrete.